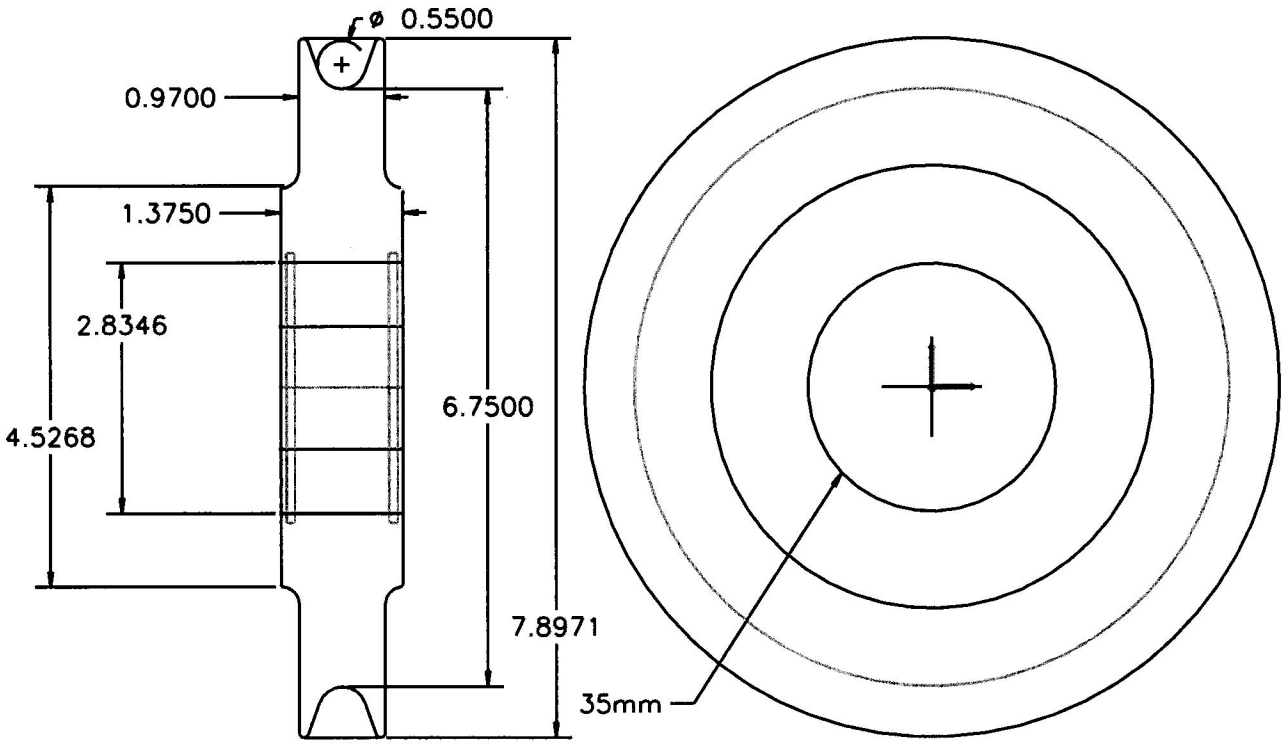

1/2" x 8" Pulley	
Matt Sweeney Special Effects, Inc.	
Bearing	JAF 5207 KZZE double row sealed ball bearing
Pulley Material	6061 T6 Aluminum Plate Type II Anodized